John BOOS
Since 1887

ITEM #: _____ QTY: _____
MODEL #: _____
PROJECT NAME: _____

3601 S. Banker St. Effingham, IL 62401 • P.O. BOX 609 • Ph: (888) 431-2667 • Fax: (800) 433-2667

"160-1" STAINLESS STEEL ENCLOSED WORK TABLES

OPEN BASE STYLE

FEATURES:

- 16 GAUGE STAINLESS STEEL FLAT TOP
- OPEN BASE STYLE
- TYPE 300 STAINLESS STEEL WITH # 4 POLISH, SATIN FINISH
- TOP IS SOUND DEADENED
- REINFORCED WITH 1"X2" CHANNEL RUNNING ENTIRE LENGTH OF TABLE
- 1-1/2" STALLION EDGE ON FRONT AND REAR WITH SIDE EDGES 90 DEGREE BEND DOWN FOR TABLE LINE-UP
- STAINLESS STEEL BASE AND UNDERSHELF
- UNDERSHELF IS SECURED IN A FIXED POSITION, 14-7/8" ABOVE FLOOR
- SHIPPED STANDARD WELDED SET-UP
- NSF AND DEPT. OF AGRICULTURE APPROVED

CONSTRUCTION:

- TOP: STAINLESS STEEL TOPS ARE TIG WELDED, EXPOSED WELDS ARE POLISHED TO MATCH ADJACENT SURFACE.

STALLION EDGE

MATERIAL:

- TOP: 16 GAUGE STAINLESS STEEL TYPE 300 STAINLESS STEEL WITH #4 POLISH, SATIN FINISH
- SHELF: 18 GAUGE TYPE 300 STAINLESS STEEL, #4 POLISH WITH SATIN FINISH
- LEGS: 1-1/2" SQUARE O.D., 16 GAUGE TUBULAR STAINLESS STEEL
- PANELS: 22 GAUGE TYPE 300 STAINLESS STEEL, #4 POLISH WITH SATIN FINISH
- FEET: 1" ADJUSTABLE STAINLESS STEEL BULLET FEET

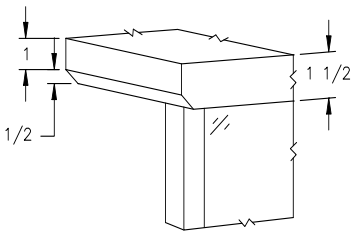

16 GAUGE TOP

24" WIDE	QTY	30" WIDE	QTY
160-01		160-06	
160-02		160-07	
160-03		160-08	
160-03A		160-08A	
160-04		160-09	
160-04A		160-09A	
160-05		160-10	

OPTIONAL ACCESSORIES

DESCRIPTION	MODEL #	QTY
CASTERS		
OVERSHELVES		
POT RACK		
SINKS		
INTERMEDIATE SHELVES		
S/S BUN PAN RACK		

DETAILED SPECIFICATIONS

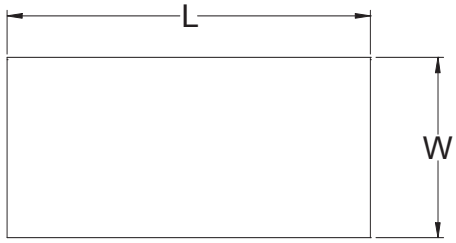

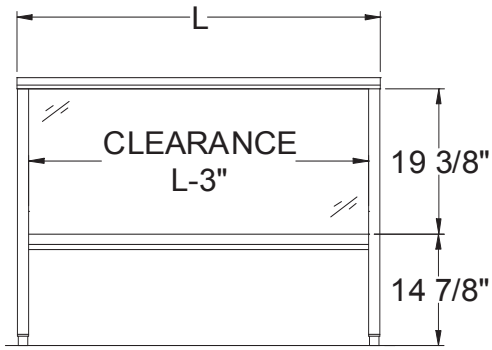

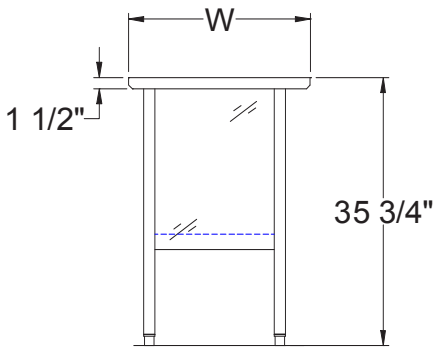

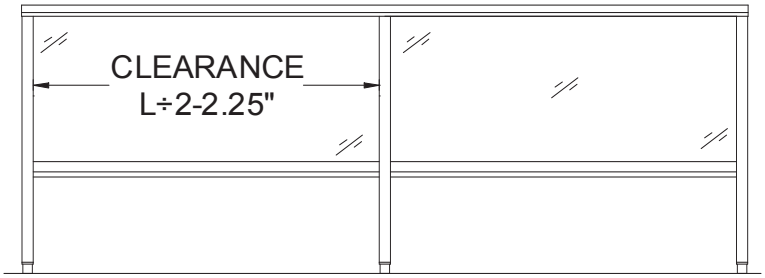

- UNITS 7 FT. AND LARGER ARE FURNISHED WITH SIX LEGS.
- FINISHED SIZE OF UNDERSHELF.
  SHELF LENGTH = LENGTH MINUS 4.875”
  SHELF WIDTH = WIDTH MINUS 4.25”

16 GAUGE TOP

LENGTH	24" WIDE	WT. (LBS)	30” WIDE	WT. (LBS)
48"	160-01	96	160-06	110
60"	160-02	113	160-07	128
72"	160-03	134	160-08	154
84"	160-03A	220	160-08A	247
96"	160-04	157	160-09	194
108"	160-04A	273	160-09A	300
120"	160-05	199	160-10	228

SOME UNITS SHIP UNASSEMBLED FOR REDUCED SHIPPING COST. ALL DIMENSIONS ARE TYPICAL. TOLERANCE +/- .500"

John Boos & Co. is constantly engaged in a program of improving products and therefore reserves the right to change specifications without prior notice.